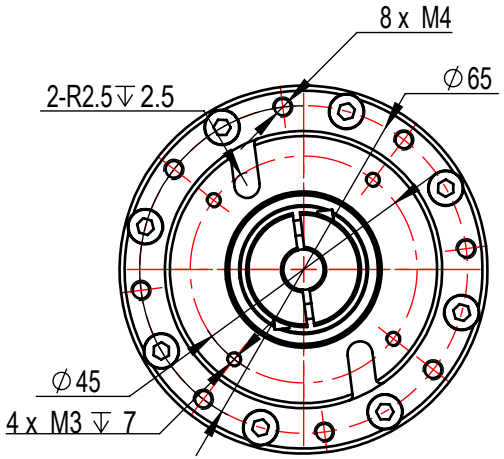

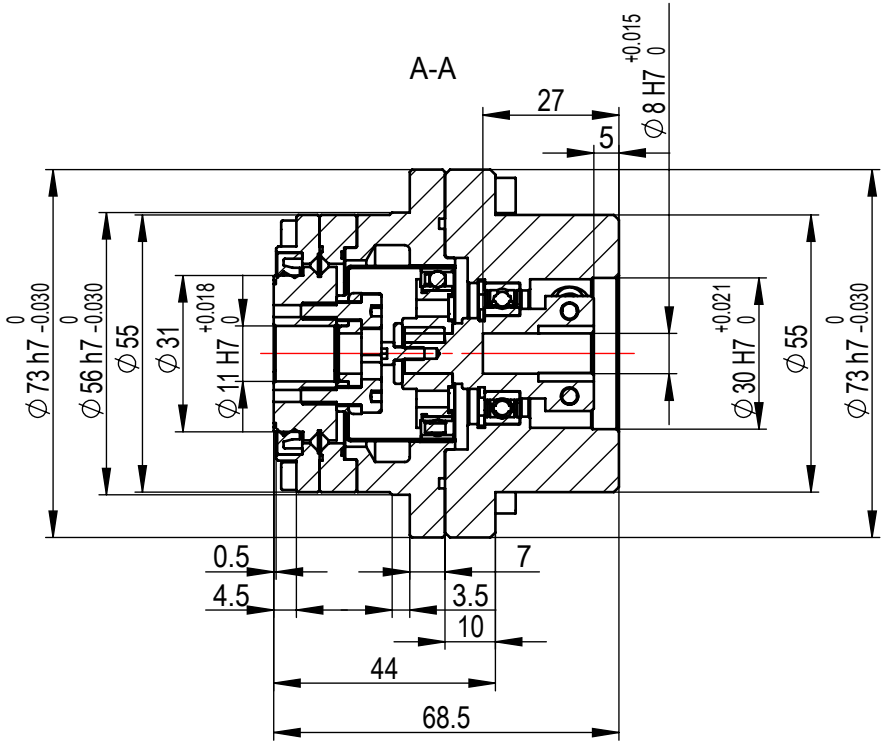

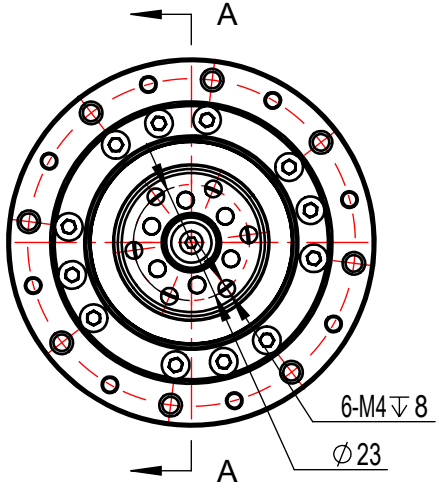

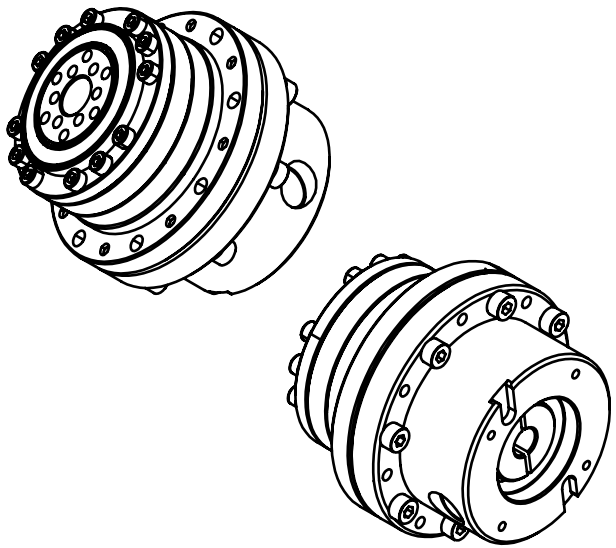

LCSG-14-XXX-RDB-8-25-30-45-M3	
Harmonic Reducer	HONPINE