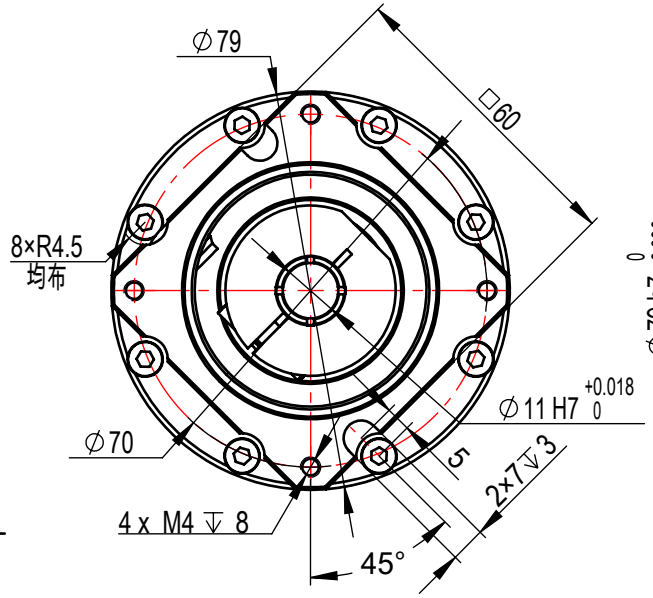

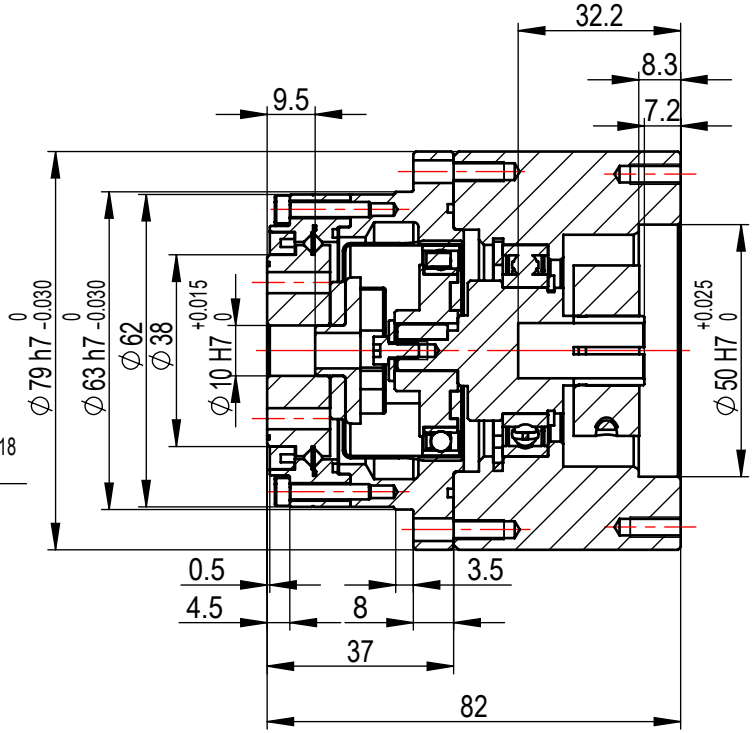

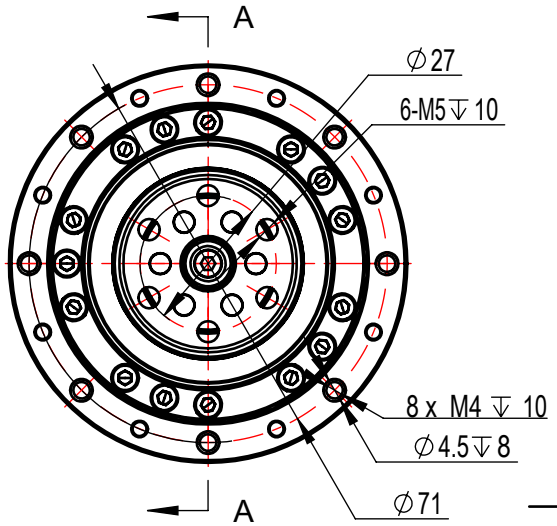

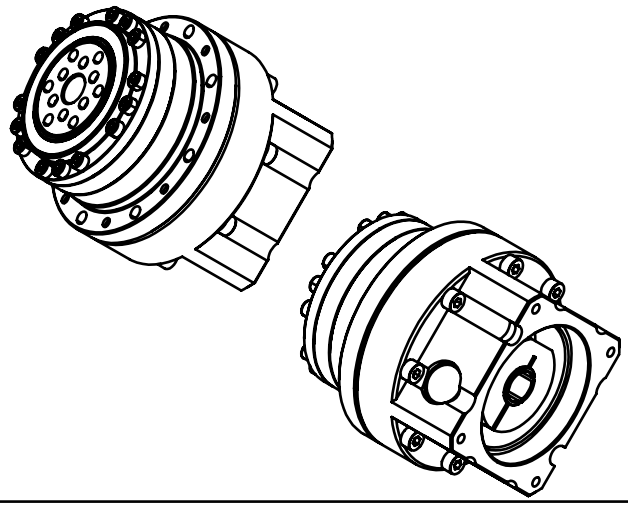

LCSG-17-XXX-RDB-11-30-50-70-M4	
Harmonic Reducer	HONPINE