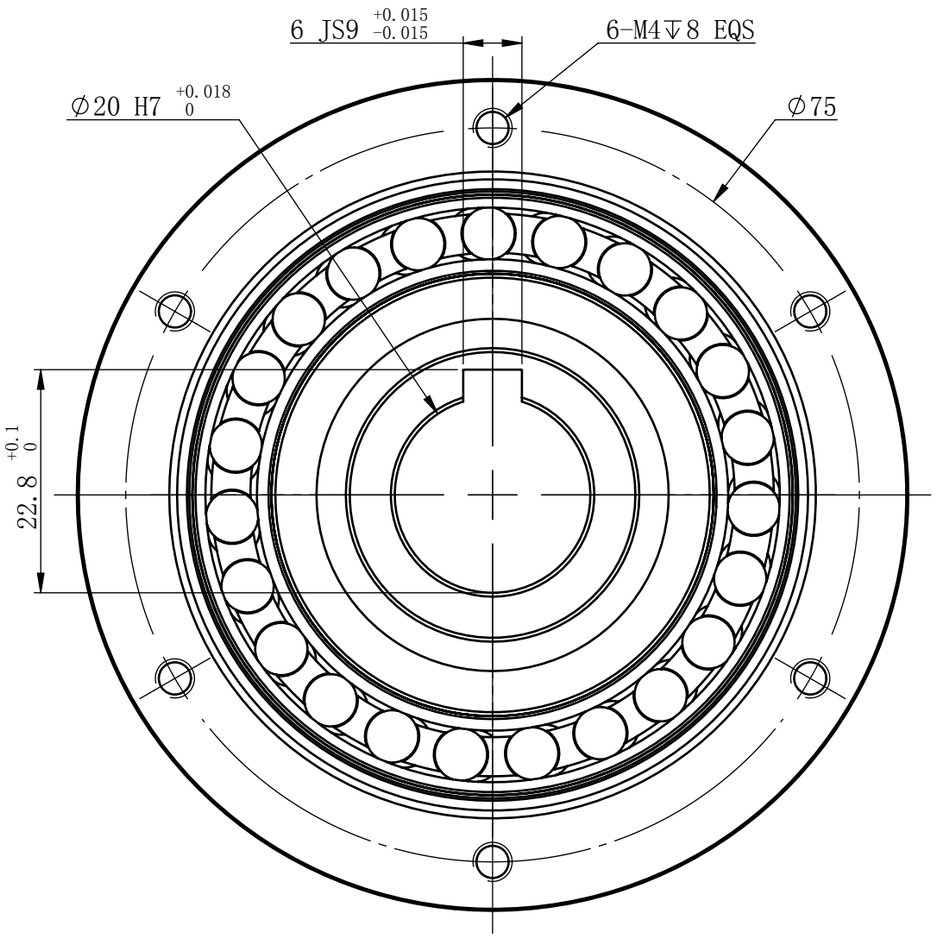

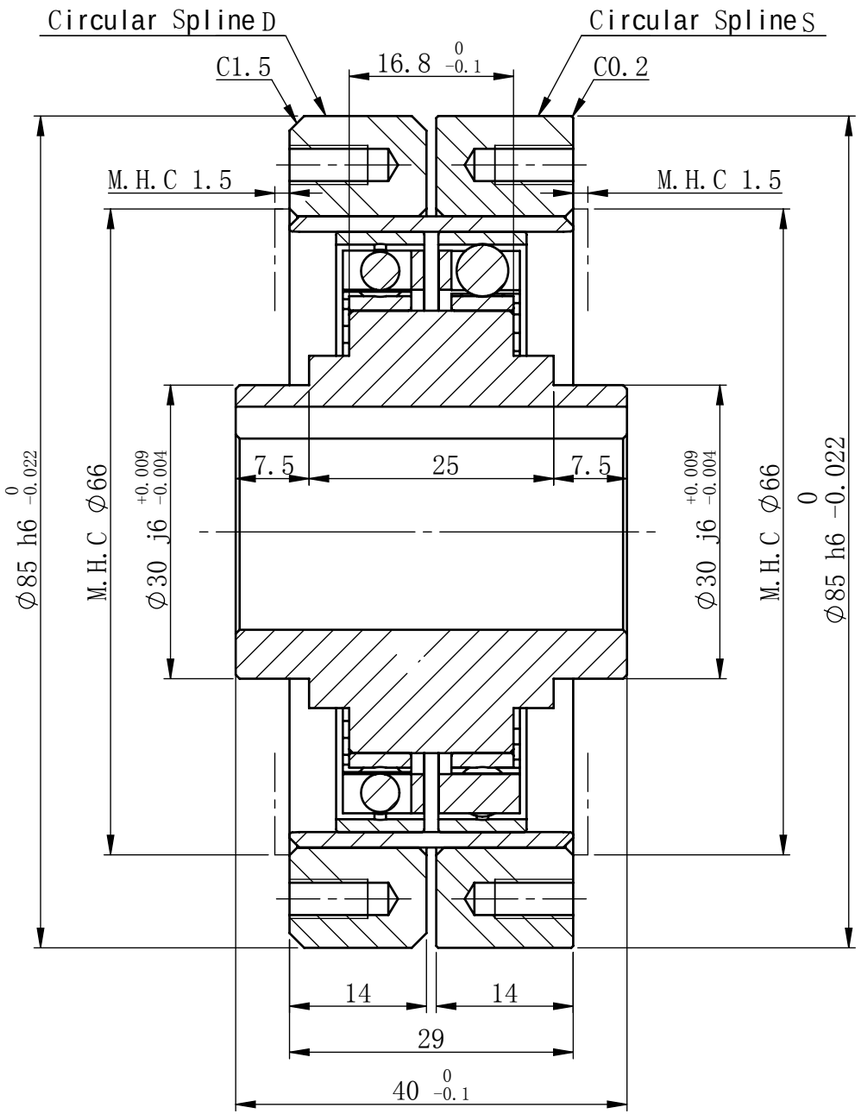

M.H.C : MINIMUM HOUSING CLEARANCE

FDS-20-XXX-CJ
Harmonic Reducer
HONPINE