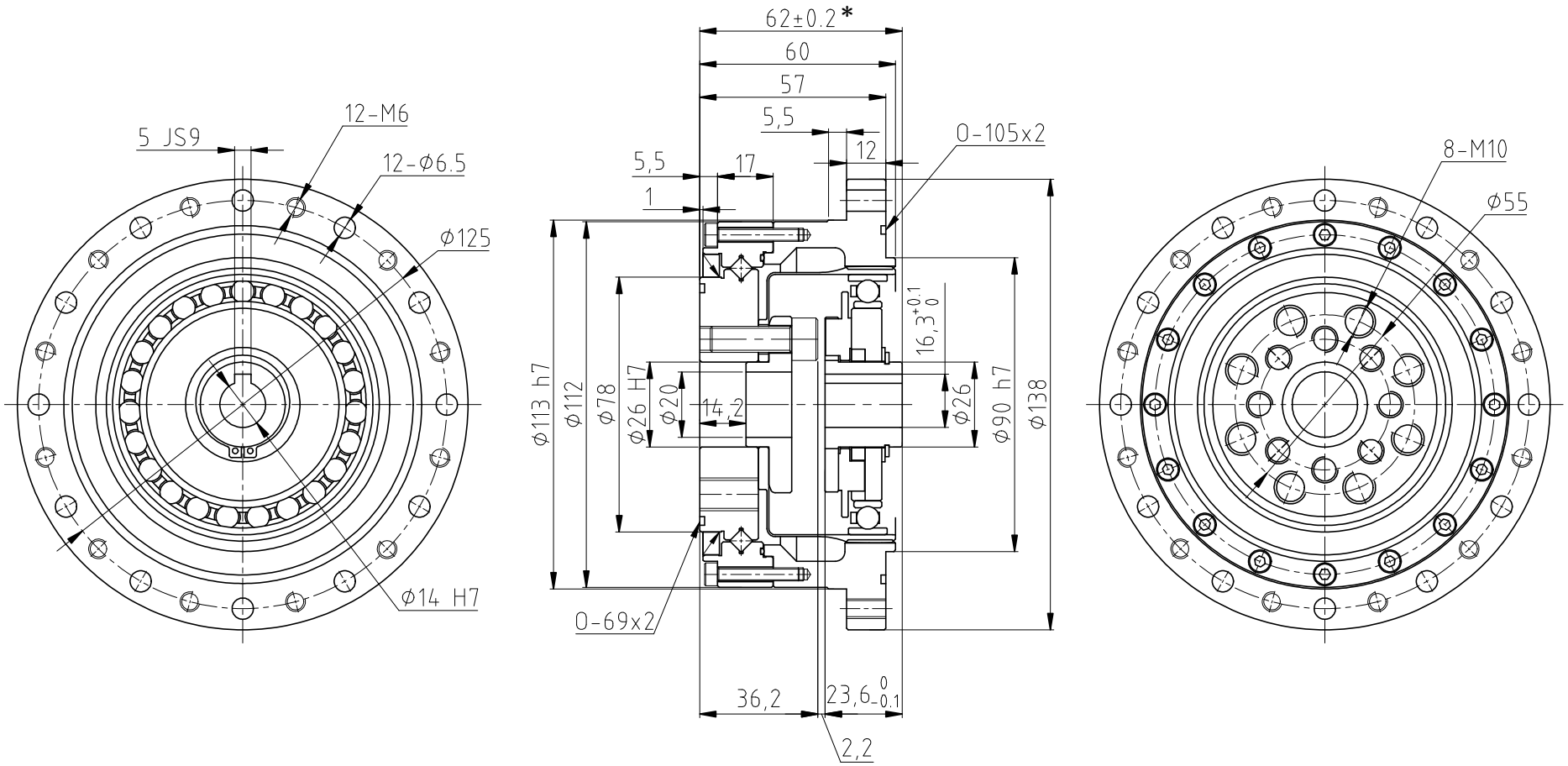

FSG-32-XX-U-II
Harmonic Reducer
HONPINE